Dunbarton™ CORPORATION

868 MURRAY ROAD, DOTHAN, AL 36303

ACHIEVER "ES"

Composite Frame System
Center Hinged Patio
Utilizing a Fiberglass Door Panel

INSWING

"NON-IMPACT"

L F Schmidt

L. F. SCHMIDT LICENSE No. 43409 STATE OF FLORIDA PROFESSIONAL ENGINEER

Digitally signed by Lyndon F Schmidt
Date: 2023.07.06 18:27:16 -04'00'

This item has been digitally signed and sealed by **L. F. Schmidt, P.E.** on the date adjacent to the seal.

Printed copies of this document are not considered signed and sealed and the signature must be verified on any electronic copies.

THIS PRODUCT APPROVAL IS VALID ONLY FOR THE STATE OF FLORIDA

GENERAL NOTES

1. This product has been evaluated and is in compliance with the 8th Edition (2023) Florida Building Code (FBC) structural requirements excluding the "High Velocity Hurricane Zone" (HVHZ).
2. Product anchors shall be as listed and spaced as shown on details. Anchor embedment to base material shall be beyond wall dressing or stucco.
3. When used in areas requiring wind borne debris protection this product is required to be protected with an impact resistant covering that complies with FBC Sections 1609.1.2 & R301.2.1.2.
4. Site conditions that deviate from the details of this drawing require further engineering analysis by a licensed engineer or registered architect.

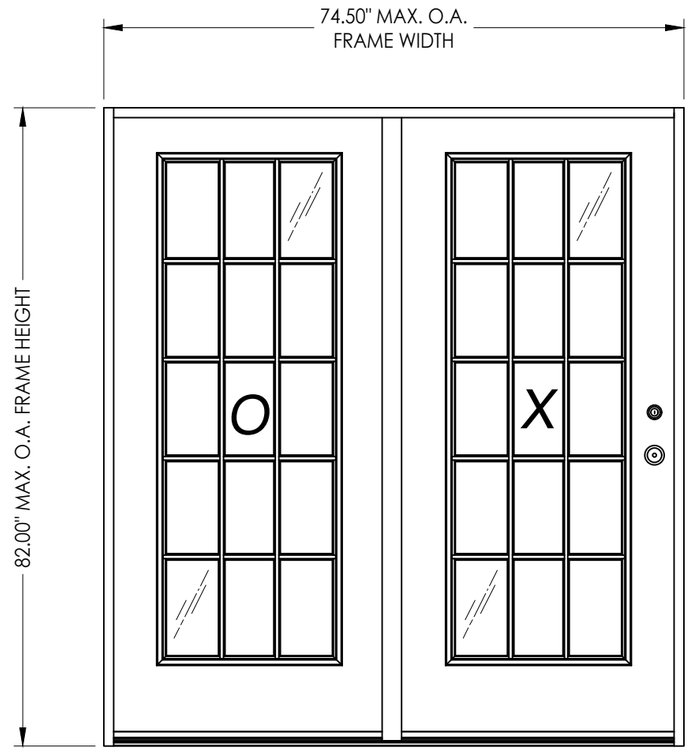

Retangular Glazed
w/ Decorative Inserts

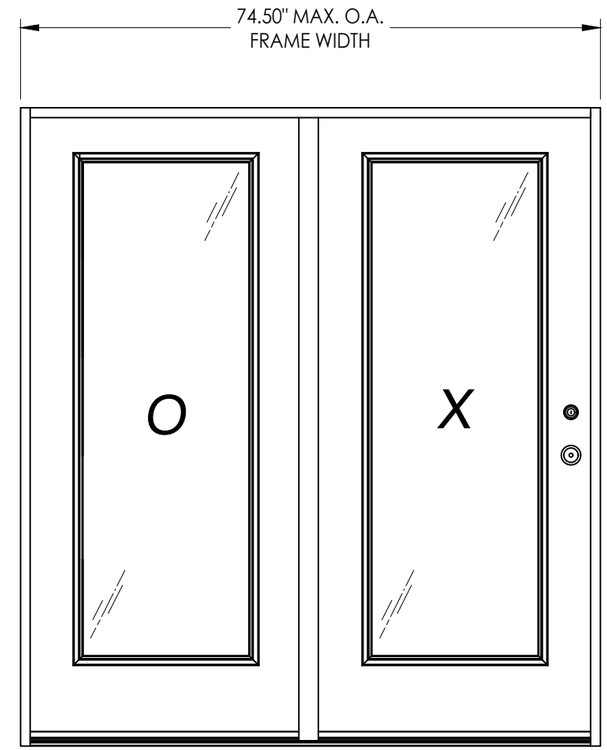

Retangular Glazed

DOOR TYPE	MAX. FRAME DIMENSION	MAX. O.A. PANEL DIMENSION	OVERALL D.L.O. DIMENSION	DESIGN PRESSURE (PSF)	
				POSITIVE	NEGATIVE
FIBERGLASS	74.50" X 82.00"	35.75" X 79.00"	21.00" X 63.00"	+50.0	-55.0

TABLE OF CONTENTS

SHEET #	DESCRIPTION
1	Typical elevations, design pressures & general notes
2	Door panel details
3	Horizontal cross section
4	Vertical cross sections
5	Vertical cross sections
6	Buck & frame anchoring
7	Bill of materials, glazing details and components

Documents Prepared By:
Lyndon F. Schmidt
P.E. No. 43409
RW BUILDING CONSULTANTS, INC.
P.O. Box 230, Valrico, FL 33595
Phone No.: 813.659.9197
FBPE Registry No. 9813

PRODUCT: DUNBARTON ACHIEVER "ES" INSWING "NON-IMPACT"

PART OR ASSEMBLY: TYPICAL ELEVATION, DESIGN PRESSURES & GENERAL NOTES

REVISIONS

NO.	DATE		BY
4	7/06/23	UPDATE TO 8TH ED. (2023) FBC	LFS
3	8/11/20	UPDATE TO 7TH ED. (2020) FBC	DAC
2	9/29/17	UPDATE TO 6TH ED. (2017) FBC	LFS
1	3/23/15	UPDATE TO 5TH ED. (2014) FBC	JK

DATE: 03/14/12
SCALE: N.T.S.
DWG. BY: JK
CHK. BY: LFS
DRAWING NO.: FL-15362.12
SHEET 1 OF 7

© 2012 R.W. BUILDING CONSULTANTS INC.

G:\2023 FBC DRAWINGS\Dunbarton Corp\FL-15362 R4 Achiever\FL-15362.7-12.dwg

HARDWARE TABLE	
MANUFACTURER	MODEL
PAMEX	KNOB: FT3 SERIES DEADBOLT: FD2 SERIES

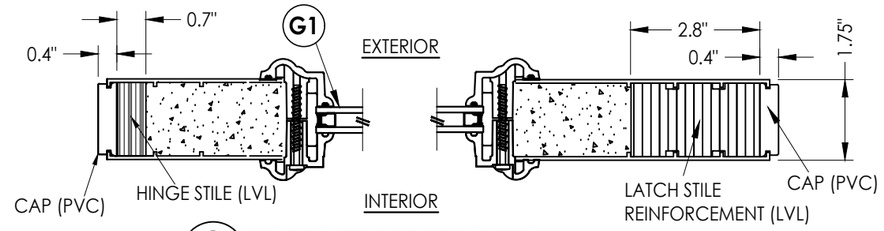

1/3 HORIZONTAL CROSS SECTION

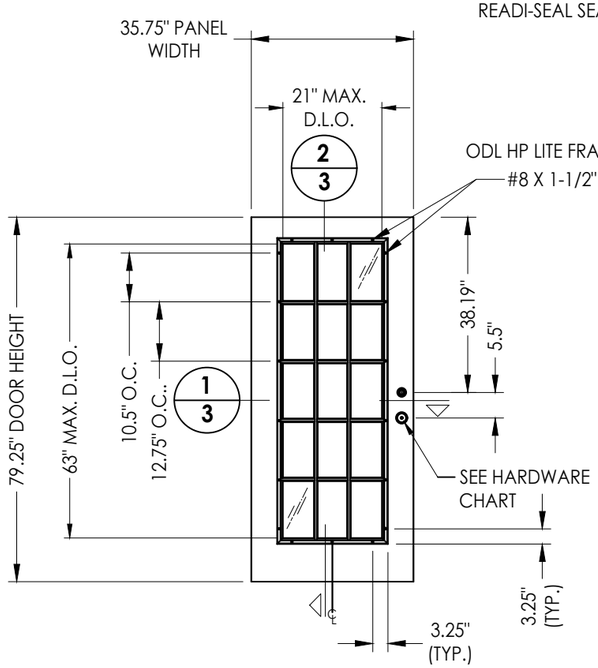

PLASTPRO FIBERGLASS DOOR PANEL
(Rectangular Glazed)

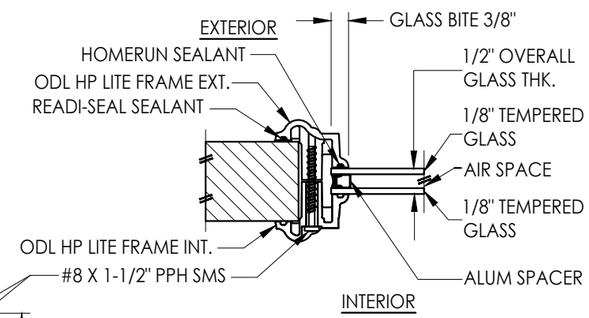

G1 GLAZING DETAIL

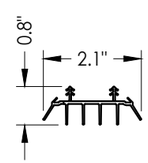

2A DOOR SWEEP

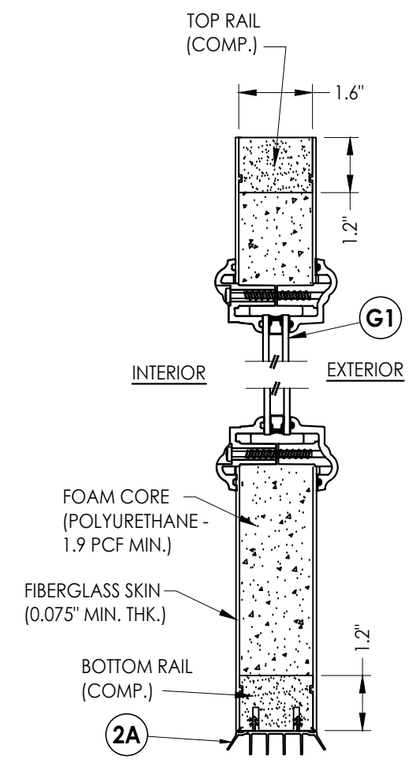

2/3 VERTICAL CROSS SECTION

Documents Prepared By:
Lyndon F. Schmidt
P.E. No. 43409

RW BUILDING CONSULTANTS, INC.
P.O. Box 230, Valrico, FL 33595
Phone No.: 813.659.9197
FBPE Registry No. 9813

PRODUCT: DUNBARTON ACHEIVER STEEL FRAME SYSTEM

PART OR ASSEMBLY: DOOR PANEL DETAILS

REVISIONS

NO.	DATE		
4	7/06/23	UPDATE TO 8TH ED. (2023) FBC	LFS
3	8/11/20	UPDATE TO 7th ED. (2020) FBC	DAC
2	9/29/17	UPDATE TO 6TH ED. (2017) FBC	LFS
1	3/23/15	UPDATE TO 5TH ED. (2014) FBC	JK

BY

DATE: 03/14/12
SCALE: N.T.S.
DWG. BY: JK
CHK. BY: LFS
DRAWING NO.: FL-15362.12
SHEET 2 OF 7

© 2012 R.W. BUILDING CONSULTANTS INC.

G:\2023 FBC DRAWINGS\Dunbarton Corp\FL-15362 R4 Achiever\FL-15362.7-12.dwg

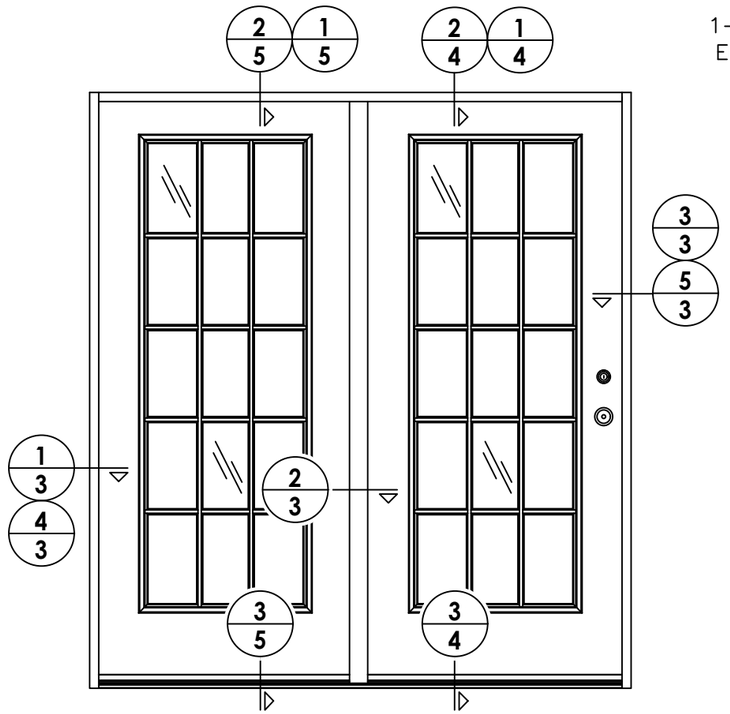

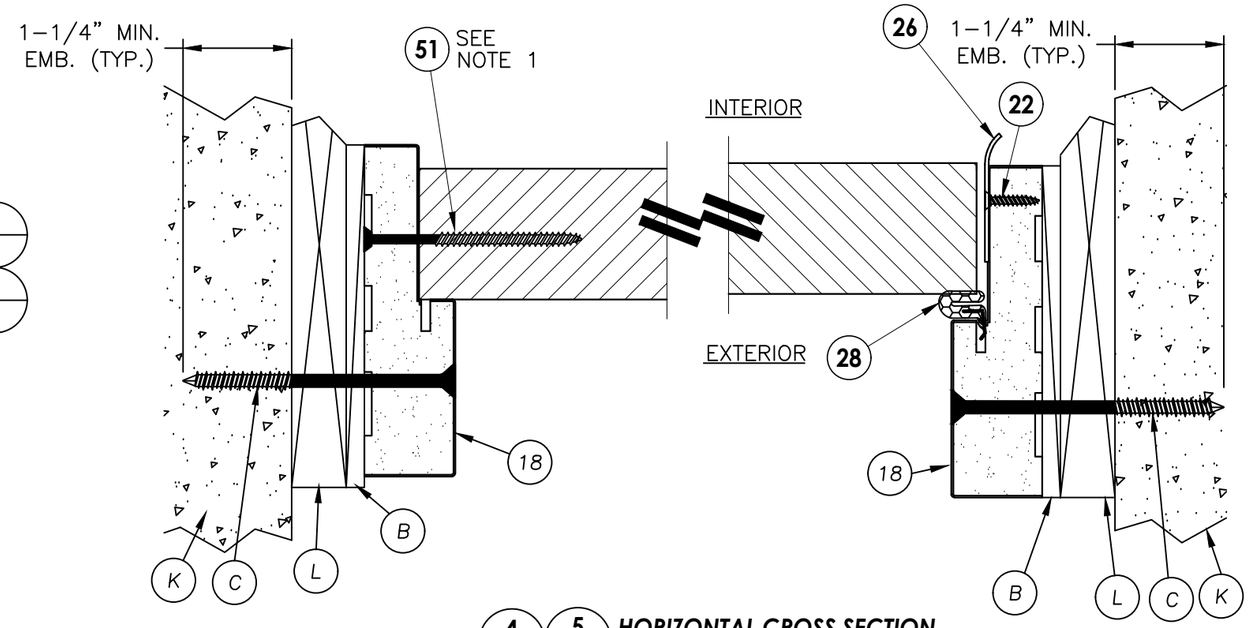

4/3 5/3 HORIZONTAL CROSS SECTION
Shown w/1X sub-buck

NOTES:

1. SCREWS ANCHORING SIDELITE TO JAMB ITEM #51 ARE LOCATED AT 17", 30.5", 44.75" & 69" FROM THE BOTTOM OF FRAME.

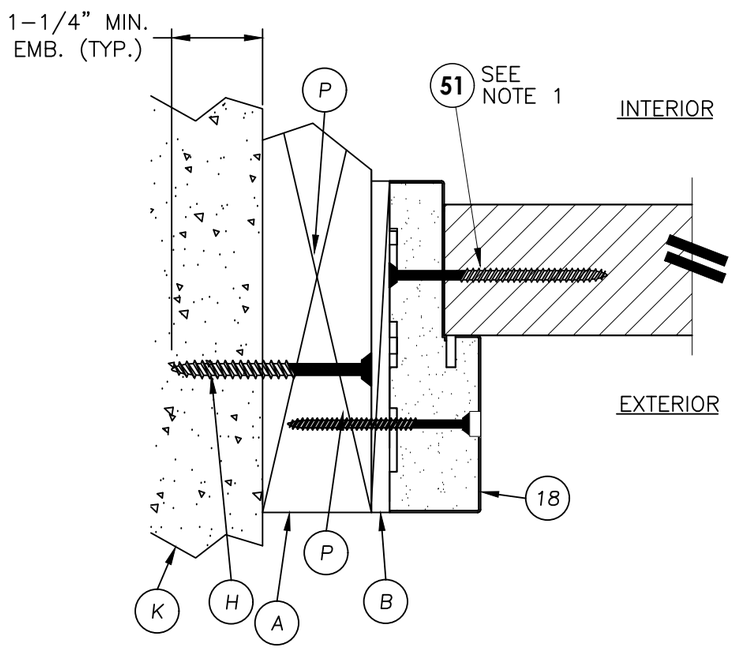

1/3 HORIZONTAL CROSS SECTION

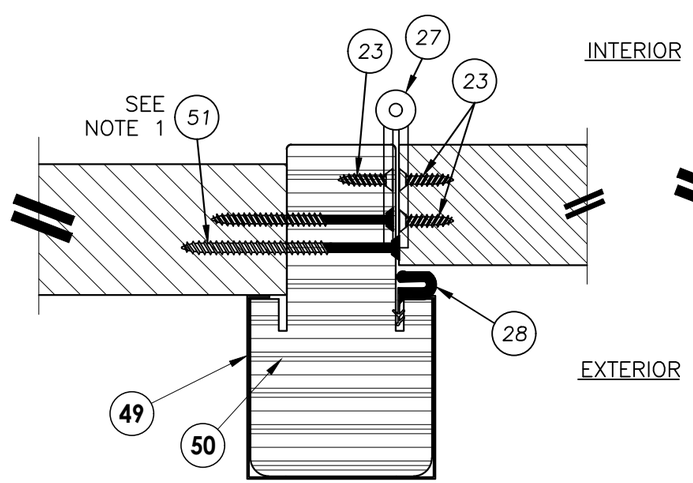

2/3 HORIZONTAL CROSS SECTION

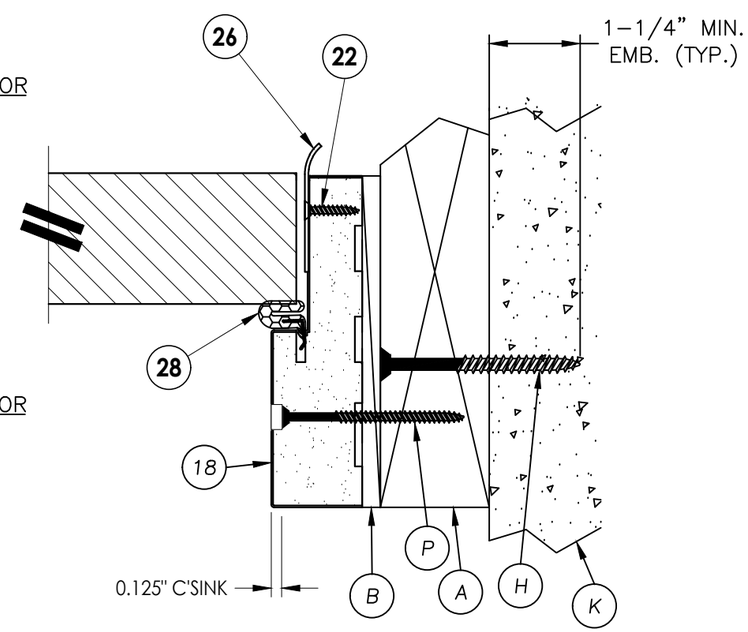

3/3 HORIZONTAL CROSS SECTION

Documents Prepared By:
Lyndon F. Schmidt
P.E. No. 43409

RW BUILDING CONSULTANTS, INC.
P.O. Box 230, Valrico, FL 33595
Phone No.: 813.659.9197
FBPE Registry No. 9813

PRODUCT: DUNBARTON ACHIEVER "ES" INSWING "NON-IMPACT"

PART OR ASSEMBLY: HORIZONTAL CROSS SECTIONS

NO.	DATE	REVISIONS	BY
4	7/06/23	UPDATE TO 8TH ED. (2023) FBC	LFS
3	8/11/20	UPDATE TO 7th ED. (2020) FBC	DAC
2	9/29/17	UPDATE TO 6TH ED. (2017) FBC	LFS
1	3/23/15	UPDATE TO 5TH ED. (2014) FBC	JK

DATE: 03/14/12
SCALE: N.T.S.
DWG. BY: JK
CHK. BY: LFS
DRAWING NO.: FL–15362.12
SHEET 3 OF 7

© 2012 R.W. BUILDING CONSULTANTS INC.

G:\2023 FBC DRAWINGS\Dunbarton Corp\FL-15362 R4 Achiever\FL-15362.7-12.dwg

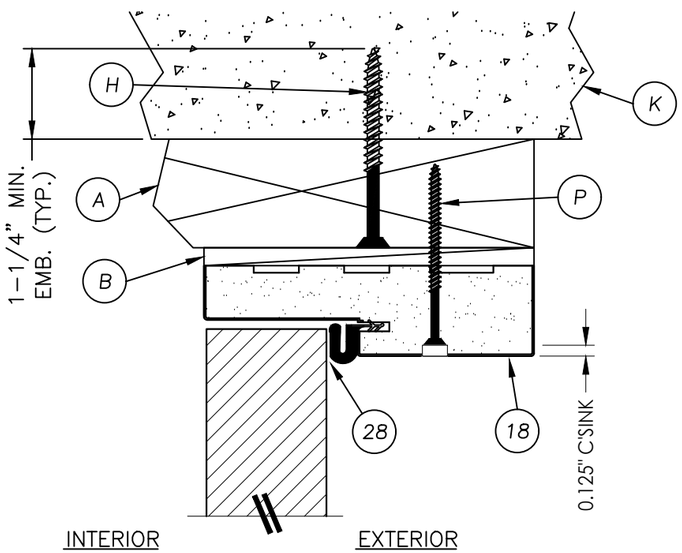

1/4 VERTICAL CROSS SECTION

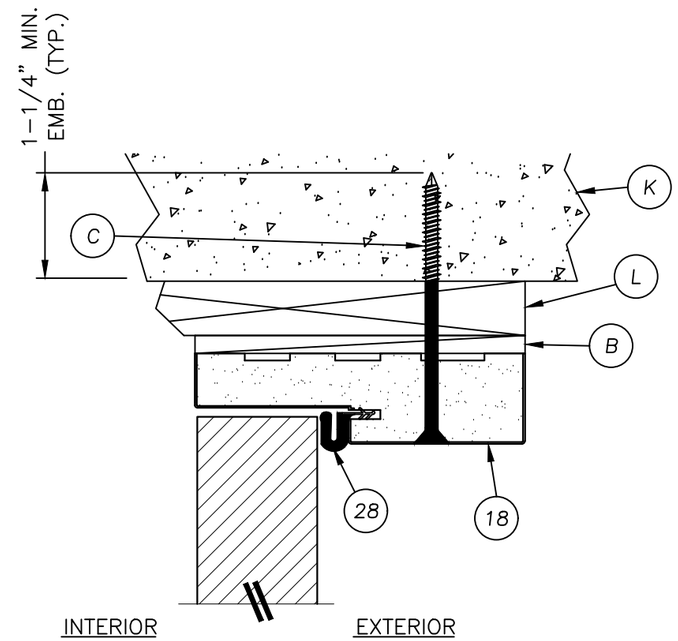

2/4 VERTICAL CROSS SECTION
Shown w/1X sub-buck

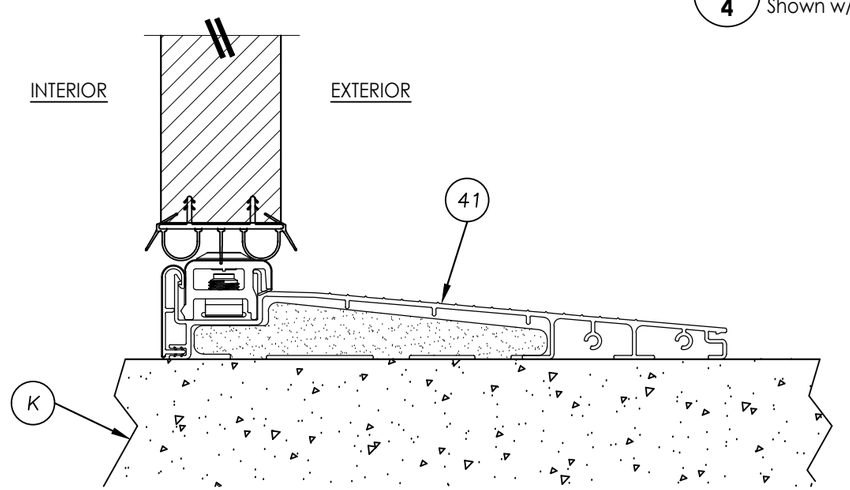

3/4 VERTICAL CROSS SECTION

Documents Prepared By:
Lyndon F. Schmidt
P.E. No. 43409
RW BUILDING CONSULTANTS, INC.
P.O. Box 230, Valrico, FL 33595
Phone No.: 813.659.9197
FBPE Registry No. 9813

PRODUCT: DUNBARTON ACHIEVER "ES" INSWING "NON-IMPACT"

PART OR ASSEMBLY: VERTICAL CROSS SECTIONS

REVISIONS

NO.	DATE		BY
4	7/06/23	UPDATE TO 8TH ED. (2023) FBC	LFS
3	8/11/20	UPDATE TO 7th ED. (2020) FBC	DAC
2	9/29/17	UPDATE TO 6TH ED. (2017) FBC	LFS
1	3/23/15	UPDATE TO 5TH ED. (2014) FBC	JK

DATE: 03/14/12
SCALE: N.T.S.
DWG. BY: JK
CHK. BY: LFS
DRAWING NO.: FL-15362.12
SHEET 4 OF 7

© 2012 R.W. BUILDING CONSULTANTS INC.

G:\2023 FBC DRAWINGS\Dunbarton Corp\FL-15362 R4 Achiever\FL-15362.7-12.dwg

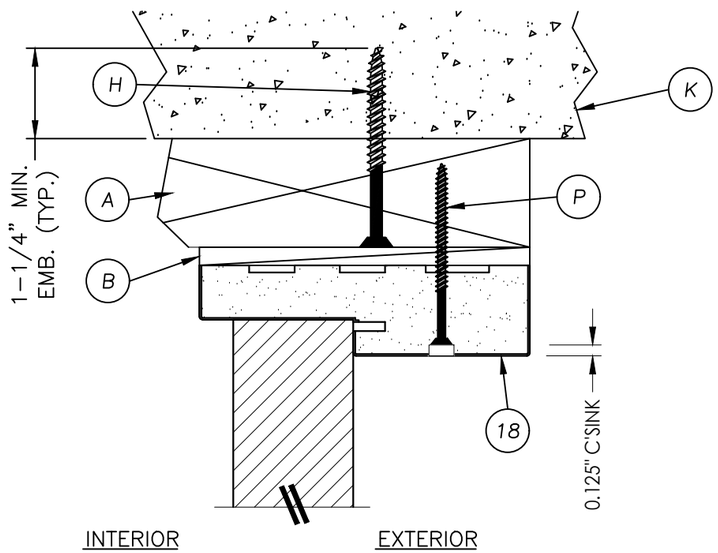

1/5 **VERTICAL CROSS SECTION**

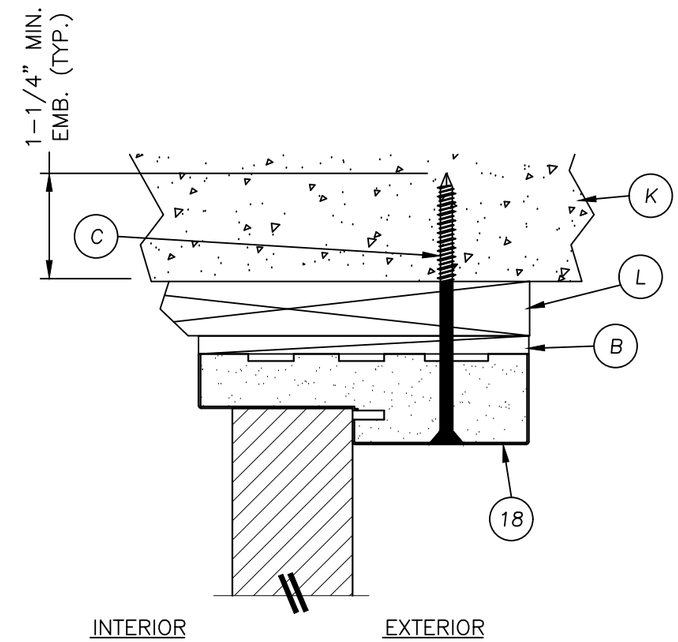

2/5 **VERTICAL CROSS SECTION**
Shown w/1X sub-buck

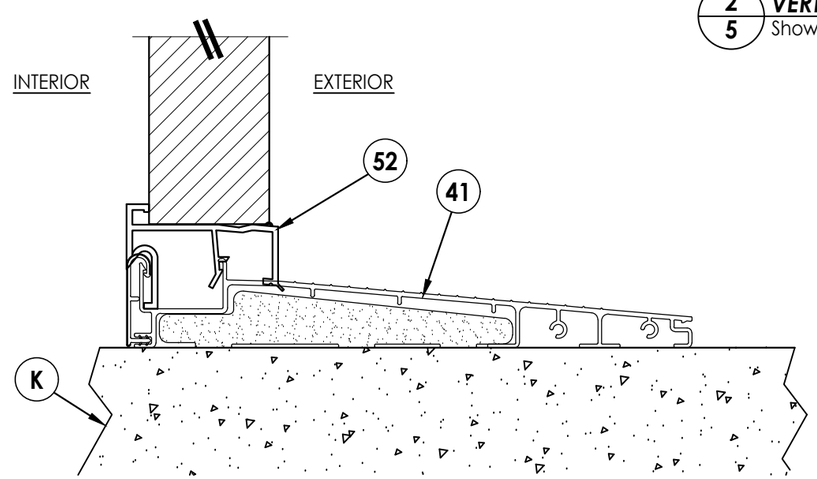

3/5 **VERTICAL CROSS SECTION**

Documents Prepared By:
Lyndon F. Schmidt
P.E. No. 43409

RW BUILDING CONSULTANTS, INC.
P.O. Box 230, Valrico, FL 33595
Phone No.: 813.659.9197
FBPE Registry No. 9813

PRODUCT:
DUNBARTON ACHIEVER "ES"
INSWING "NON-IMPACT"

PART OR ASSEMBLY:
VERTICAL CROSS
SECTIONS (SIDELITE)

NO.	DATE	REVISIONS	BY
4	7/06/23	UPDATE TO 8TH ED. (2023) FBC	LFS
3	8/11/20	UPDATE TO 7th ED. (2020) FBC	DAC
2	9/29/17	UPDATE TO 6TH ED. (2017) FBC	LFS
1	3/23/15	UPDATE TO 5TH ED. (2014) FBC	JK

DATE: 03/14/12
SCALE: N.T.S.
DWG. BY: JK
CHK. BY: LFS
DRAWING NO.: FL–15362.12
SHEET 5 OF 7

© 2012 R.W. Building Consultants Inc.

G:\2023 FBC DRAWINGS\Dunbarton Corp\FL-15362 R4 Achiever\FL-15362.7-12.dwg

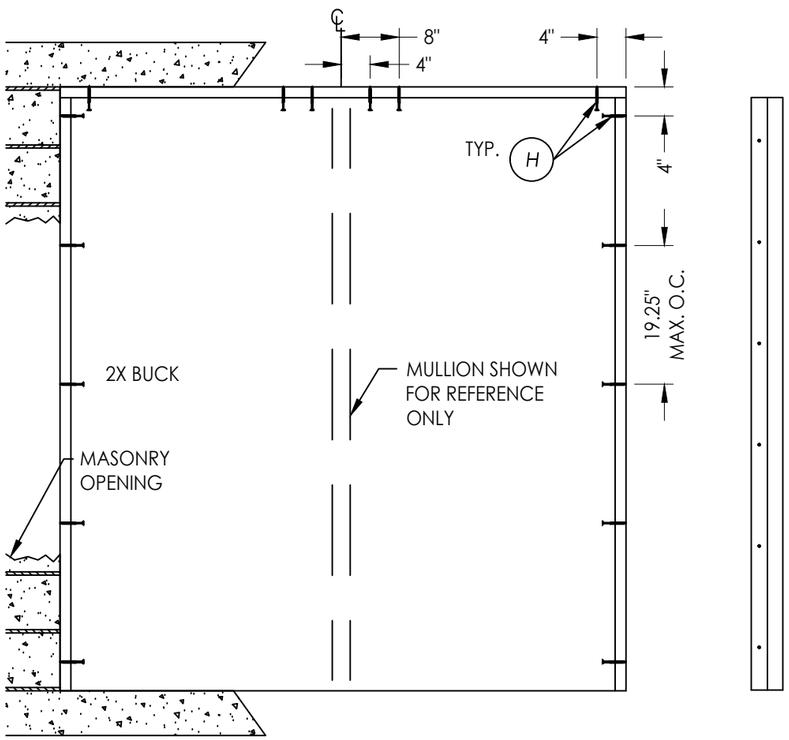

BUCK ANCHORING

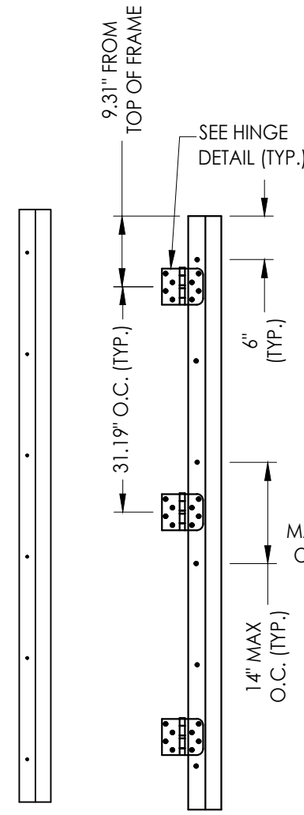

SIDELITE JAMB

HINGE MULLION

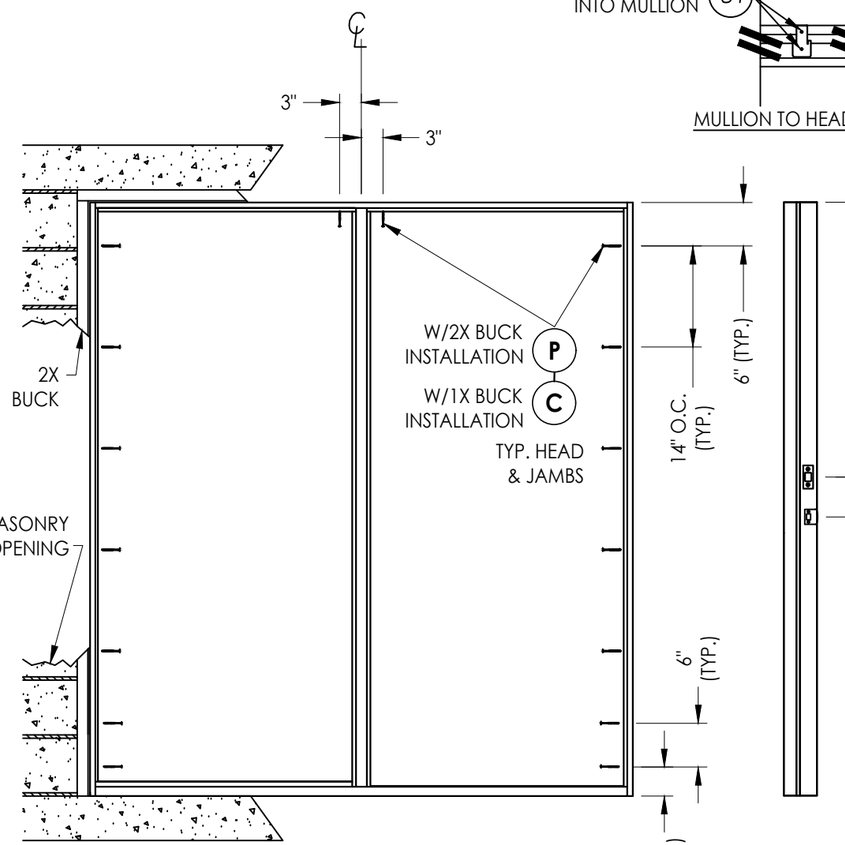

FRAME ANCHORING

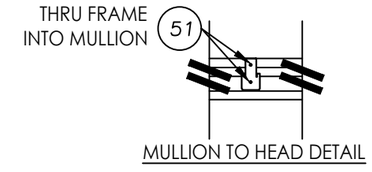

MULLION TO HEAD DETAIL

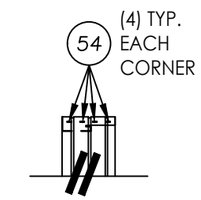

FRAME CORNER DETAIL AT HEAD

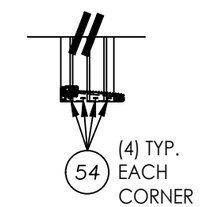

FRAME CORNER DETAIL AT SILL

STRIKE JAMB

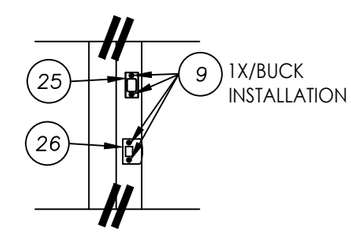

STRIKE DETAIL W/1X BUCK

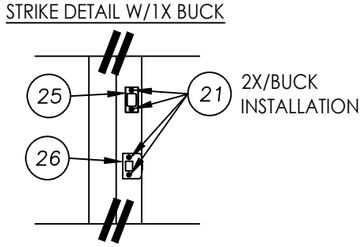

STRIKE DETAIL W/2X BUCK

CONCRETE ANCHOR NOTES:

1. *Concrete anchor locations at the corners may be adjusted to maintain the min. edge distance to mortar joints.*
2. *Concrete anchor locations noted as "MAX. ON CENTER" must be adjusted to maintain the min. edge distance to mortar joints, additional concrete anchors may be required to ensure the "MAX. ON CENTER" dimension are not exceeded.*
3. *Concrete anchor table:*

ANCHOR TYPE	ANCHOR SIZE	MIN. EMBEDMENT	MIN. CLEARANCE TO MASONRY EDGE	MIN. CLEARANCE TO ADJACENT ANCHOR
ITW TAPCON®	1/4"	1-1/4"	2"	4"
DeWALT ULTRACON+®	1/4"	1-1/4"	1"	4"
ITW TAPCON®	3/16"	1-1/4"	3"	1-1/2"

WOOD SCREW INSTALLATION NOTES:

1. *Maintain a minimum 5/8" edge distance, 1" end distance, & 1" o.c. spacing of wood screws to prevent the splitting of wood.*

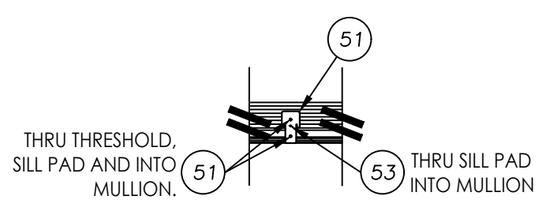

MULLION TO SILL DETAIL
(WITH SILL PAD)

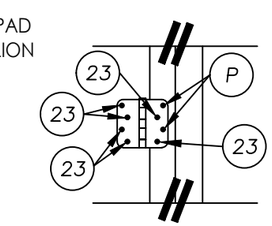

HINGE DETAIL

Documents Prepared By:
Lyndon F. Schmidt
P.E. No. 43409

RW BUILDING CONSULTANTS, INC.
P.O. Box 230, Valrico, FL 33595
Phone No.: 813.659.9197
FBPE Registry No. 9813

PRODUCT: *DUNBARTON ACHIEVER "ES" INSWING "NON-IMPACT"*

PART OR ASSEMBLY: *BUCK & FRAME ANCHORING*

REVISIONS

NO.	DATE			BY
1	3/23/15	UPDATE TO 5TH ED. (2014) FBC	JK	LFS
2	9/29/17	UPDATE TO 6TH ED. (2017) FBC	LFS	DAC
3	8/11/20	UPDATE TO 7TH ED. (2020) FBC	DAC	LFS
4	7/06/23	UPDATE TO 8TH ED. (2023) FBC	LFS	

DATE: 03/14/12
SCALE: N.T.S.
DWG. BY: JK
CHK. BY: LFS
DRAWING NO.: FL-15362.12
SHEET 6 OF 7

© 2012 R.W. BUILDING CONSULTANTS INC.

G:\2023 FBC DRAWINGS\Dunbarton Corp\FL-15362 R4 Achiever\FL-15362.7-12.dwg

BILL OF MATERIALS

ITEM #	DESCRIPTION	MATERIAL
A	2X BUCK SG >= 0.55	WOOD
B	1/4" MAX. SHIM SPACE	WOOD
C	1/4" X 3-3/4" DeWALT OR ITW PFH CONCRETE SCREWS	STEEL
H	1/4" X 2-3/4" DeWALT OR ITW CONCRETE SCREWS	STEEL
K	MASONRY - 3,000 PSI MIN. CONCRETE CONFORMING TO ACI 301 OR HOLLOW BLOCK CONFORMING TO ASTM C90	CONCRETE
L	1X BUCK SG >= .55	WOOD
P	#10 x 2-1/2" PFH WOOD SCREWS (1-1/8" MIN. EMBEDMENT)	STEEL
8	MULL PAD 4-9/16 BB ENDURA	PVC
9	3/16" X 3-1/4" ITW PFH CONCRETE SCREWS	STEEL
18	POLY FIBER JAMB (World Wide Door Comp.)	COMP
22	#7 X 3/4" PFH SCREWS	STEEL
23	#9 X 3/4" PFH SCREWS	STEEL
24	1/4" X 3-1/4" ITW PFH CONCRETE SCREWS	STEEL
25	DEADBOLT STRIKE PLATE	STEEL
26	LATCH STRIKE PLATE	STEEL
27	HINGE	STEEL
28	WEATHERSTRIP	FOAM
41	INSWING THRESHOLD (ENDURA)	ALUM./COMP
49	MULLION CAP	STEEL
50	MULLION	LVL
51	#10 X 3" PFH WS	STEEL
52	INSWING SIDELITE SPACER	PVC
53	#9 X 1 1-1/2" PFH WS	STEEL
54	3/8" X 2" X .055" STAPLE	STEEL
83	1/4" x 2-1/4" ITW CONCRETE SCREWS	STEEL

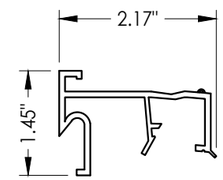

52 ***INSWING SIDELITE***
SPACER

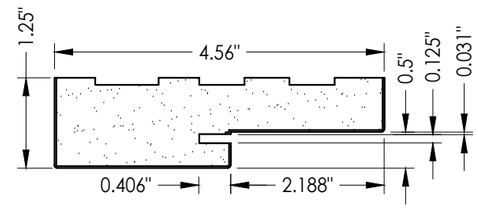

18 ***POLY FIBER JAMB***
(World Wide Door Comp.)

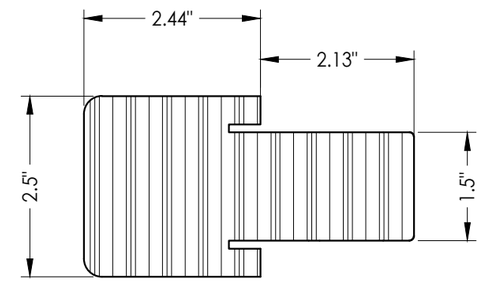

50 ***MULLION***

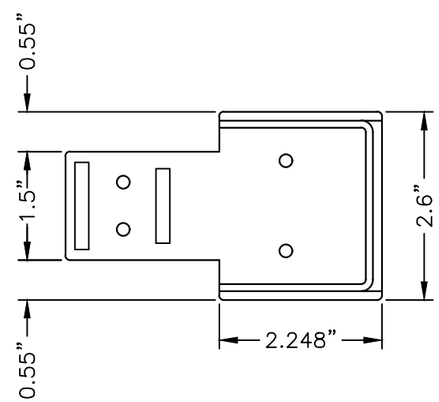

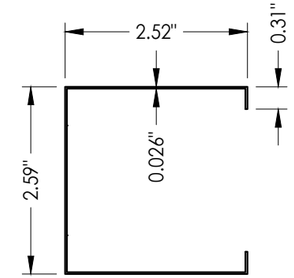

49 ***MULLION CAP***

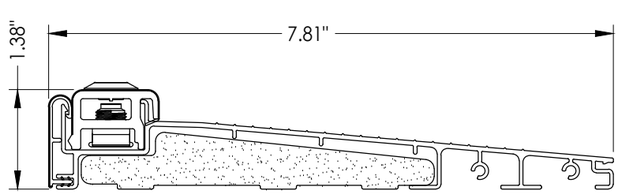

41 ***INSWING THRESHOLD***
Endura

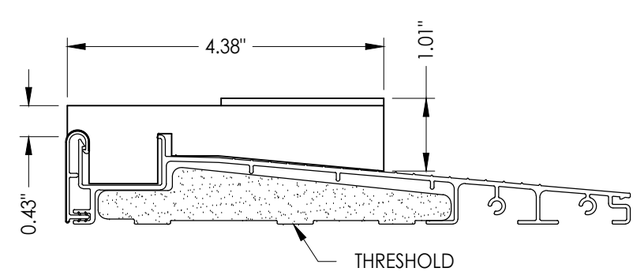

8 ***MULL PAD***
Spacer

Documents Prepared By:
Lyndon F. Schmidt
P.E. No. 43409
RW BUILDING CONSULTANTS, INC.
P.O. Box 230, Valrico, FL 33595
Phone No.: 813.659.9197
FBPE Registry No. 9813

PRODUCT: *DUNBARTON ACHIEVER "ES" INSWING "NON-IMPACT"*

PART OR ASSEMBLY: *BILL OF MATERIALS & COMPONENTS*

REVISIONS

NO.	DATE		BY
4	7/06/23	UPDATE TO 8TH ED. (2023) FBC	LFS
3	8/11/20	UPDATE TO 7th ED. (2020) FBC	DAC
2	9/29/17	UPDATE TO 6TH ED. (2017) FBC	LFS
1	3/23/15	UPDATE TO 5TH ED. (2014) FBC	JK

DATE: 03/14/12
SCALE: N.T.S.
DWG. BY: JK
CHK. BY: LFS
DRAWING NO.: FL-15362.12
SHEET 7 OF 7

© 2012 R.W. BUILDING CONSULTANTS INC.

G:\2023 FBC DRAWINGS\Dunbarton Corp\FL-15362 R4 Achiever\FL-15362.7-12.dwg